HANDLING, STORING, AND PROTECTION OF ALUMINUM

The material must be protected against damage. The following precautions are recommended to assure early acceptance of your products and workmanship.

A. HANDLE CAREFULLY - Don't drop from the truck. Stack with adequate separation so material will not rub together. Store off the ground. Protect against elements and other construction trades. Wear hand protection to prevent injury due to sharp edges of cut extrusions.

B. KEEP MATERIAL AWAY FROM WATER, MUD AND SPRAY - Prevent cement, plaster, or other materials from damaging the finish.

C. PROTECT THE MATERIALS AFTER ERECTION - Protect by wrapping with Kraft paper or by erecting Visqueen or canvas splatter screen. Cement, plaster, terrazzo, other alkaline solutions and acid based materials used to clean masonry are very harmful to the finish and should be removed with water and mild soap IMMEDIATELY.

GENERAL INSTALLATION NOTES

The following practices are recommended for all installations:

A. CHECK SHOP DRAWINGS and INSTALLATION INSTRUCTIONS to become thoroughly familiar with the project. The SHOP DRAWINGS take precedence and include specific details for the project. The INSTALLATION INSTRUCTIONS are of a general nature and cover most common conditions.

B. All materials are to be INSTALLED PLUMB, LEVEL, AND TRUE.

C. Make certain that construction which will receive your materials is in accordance with the contract documents. If not, notify the GENERAL CONTRACTOR IN WRITING and resolve differences before proceeding with your work.

D. Isolate all aluminum to be placed directly in contact with uncured masonry or incompatible materials with a heavy coat of zinc chromate or bituminous paint.

E. Check all materials on arrival for quantity and be sure you have everything required to begin installation.

F. Sealants must be compatible with all materials with which they have contact, including other sealant surfaces. Consult with sealant manufacturer for recommendations relative to joint size, shelf life, compatibility, priming, tooling, adhesion, etc.

G. FASTENING - "Fastening" means any method of securing one part to another or to adjacent materials. These instructions specify only those fasteners used within the system. Due to varying perimeter conditions and job performance requirements, anchor fasteners are not specified in these instructions. For anchor fastening, refer to the Shop Drawings or consult the fastener supplier.

H. CHECK OPENINGS - Make certain that the opening which will receive your materials is in accordance with the contract documents. If not, notify the GENERAL CONTRACTOR IN WRITING and resolve differences before proceeding with your work.

IMPORTANT NOTE:

THE INSTRUCTIONS BELOW APPLY TO STANDARD LIGHTSHELVES ONLY. PLEASE REFER TO APPLICATION SPECIFIC DRAWINGS FOR CORNER AND MISCELLANEOUS CONDITIONS.

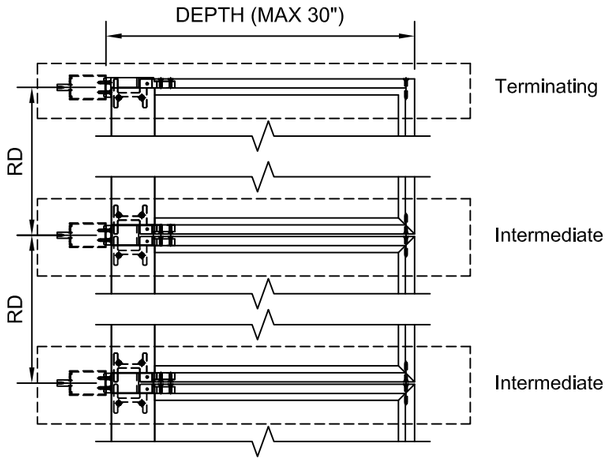

PANEL SIZING

PANEL SIZE AT INTERMEDIATE LOCATION:
LENGTH = REFERENCE DIMENSION - 2 5/8"
WIDTH = DEPTH - 5 3/4"

PANEL SIZE AT INTERMEDIATE TERMINATING LOCATION:
LENGTH = REFERENCE DIMENSION - 1 5/8"
WIDTH = DEPTH - 5 3/4"

HINGE FABRICATION

HINGE LENGTH AT INTERMEDIATE LOCATION = REFERENCE DIMENSION - 2 1/8"

HINGE LENGTH AT INTERMEDIATE TERMINATING LOCATION = REFERENCE DIMENSION - 1 1/8"

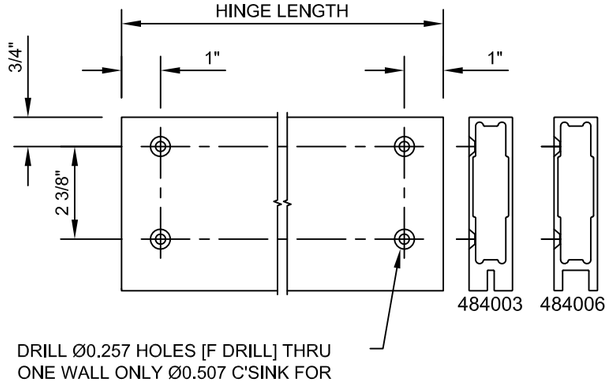

DRILL Ø0.257 HOLES [F DRILL] THRU ONE WALL ONLY Ø0.507 C'SINK FOR 1/4" FH FASTENER (TYP)

OUTRIGGER FABRICATION

OUTRIGGER LENGTH = DEPTH - 5"

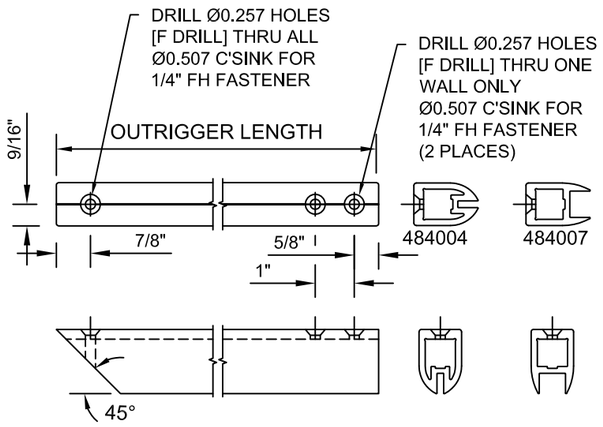

FASCIA FABRICATION

FASCIA LENGTH AT INTERMEDIATE LOCATION = REFERENCE DIMENSION - 1/4"

FASCIA LENGTH AT INTERMEDIATE TERMINATING LOCATION = REFERENCE DIMENSION + 3/4"

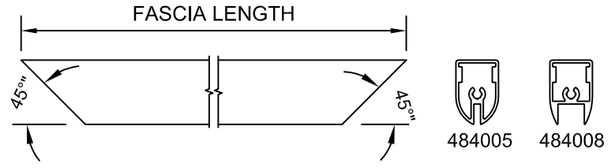

INTERMEDIATE PANEL ASSEMBLY

STEP 1

INSERT SHEAR BLOCKS INTO OUTRIGGERS AS SHOWN AND FASTEN USING TWO 128-126 (1/4-20 7/8" TYPE F) FASTENERS

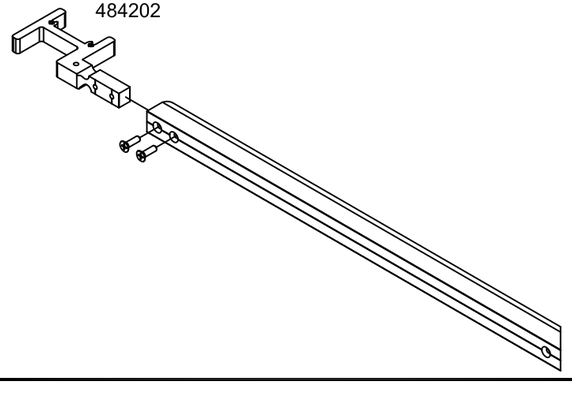

484970 (SHT 01 OF 02)

CONFIDENTIAL AND PROPRIETARY INFORMATION
KAWNEER COMPANY INC.
THESE DRAWINGS ARE THE SOLE AND EXCLUSIVE PROPERTY OF KAWNEER AND CONTAIN SENSITIVE, PRIVILEGED OR CONFIDENTIAL INFORMATION WHICH MAY BE USED ONLY FOR ITS BENEFIT. THE DISCLOSURE OF THESE DRAWINGS TO UNAUTHORIZED PERSONS IS STRICTLY PROHIBITED. THIS DOCUMENT AND ALL COPIES MUST BE RETURNED UPON DEMAND.
© COPYRIGHT KAWNEER COMPANY, INC., 2012

STEP 2

INSERT SHEAR BLOCK-OUTRIGGER ASSEMBLY INTO HINGE, AND FASTEN USING FOUR 128-126 (1/4-20 7/8" TYPE F) FASTENERS.

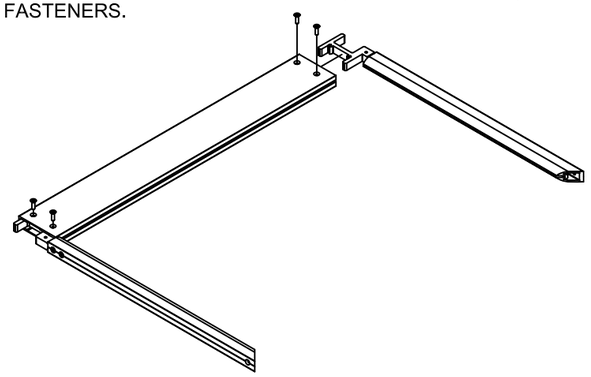

STEP 3

INSERT PANEL INTO OUTRIGGERS AND SLIDE TO HINGE. ATTACH FASCIA USING TWO 904-208 (1/4-20 2" TYPE F) FASTENERS

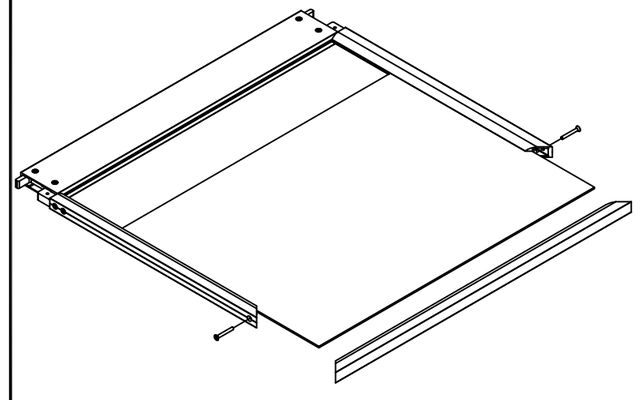

KAWNEER

Product Engineering & Development

InLighten
INTERMEDIATE
INSTALLATION
INSTRUCTIONS

95498-013
03/22/13

484970 (SHT 01 OF 02)

STEP 4

INSERT ONE 128-127 (1/4-20 3/4") SET SCREW INTO EACH SHEAR BLOCK AND ENSURE THAT THEY PROTRUDE 1/16" FROM THE BOTTOM FACE OF THE BLOCK.

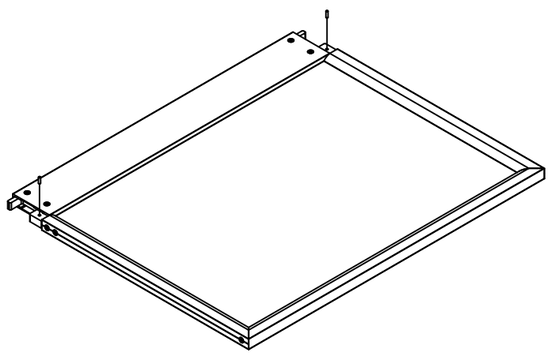

INSTALLATION

STEP 1

LOCATE ANCHOR AND ENSURE POSITION IS PLUMB AND LEVEL. USE JIG OR MATCH DRILL THREE 0.221" [#2 DRILL] HOLES IN THE PATTERN SHOWN BELOW. FASTEN ANCHOR TO SUBSTRATE USING 904-150 (1/4-20 1 1/4" TYPE F) FASTENERS. FOR TERMINATING CONDITION, INSTALL JAMB ANCHOR INSTEAD OF ANCHOR.

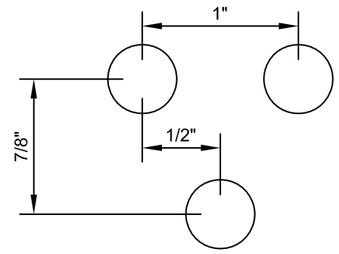

INTERMEDIATE HOLE PATTERN

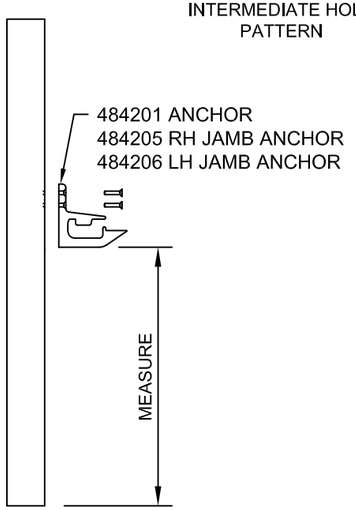

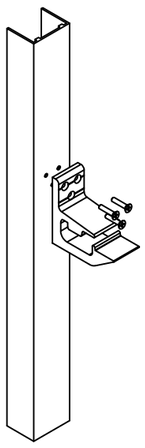

STEP 2

INSTALL PANEL ASSEMBLY AS SHOWN.

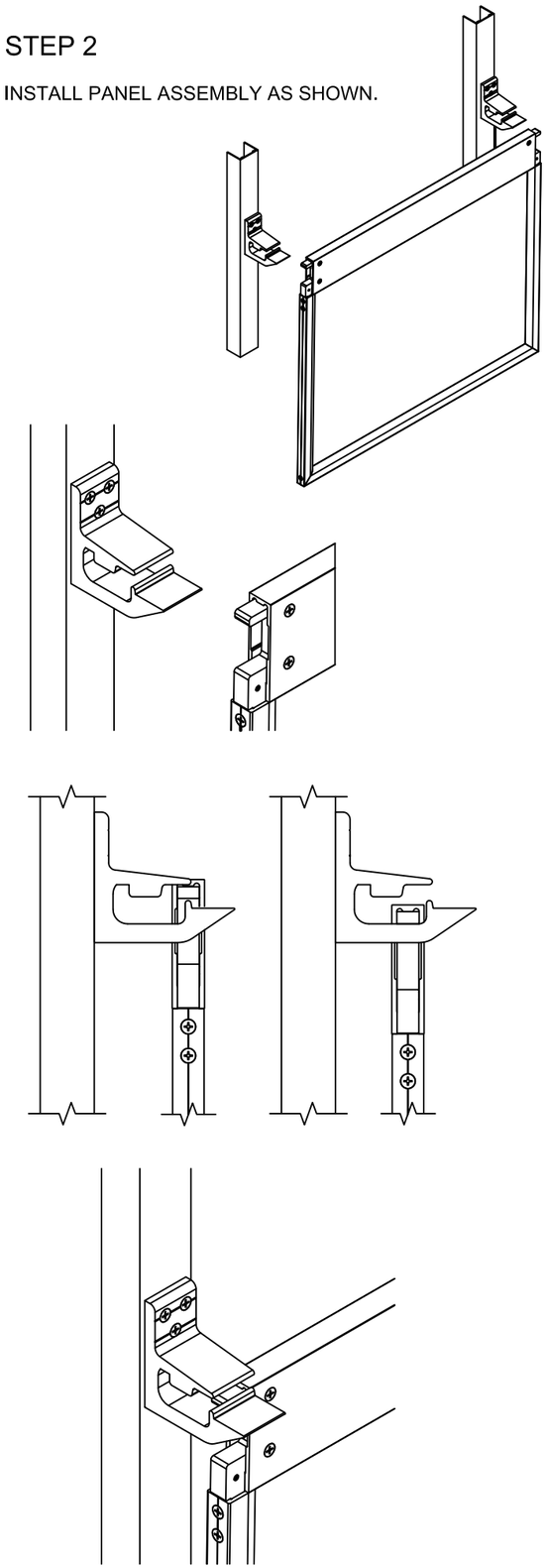

STEP 3

ROTATE SET SCREWS TO ADJUST ANGLE AND LEVEL PANEL. ENSURE ALL PANELS IN A SERIES ARE ALIGNED.

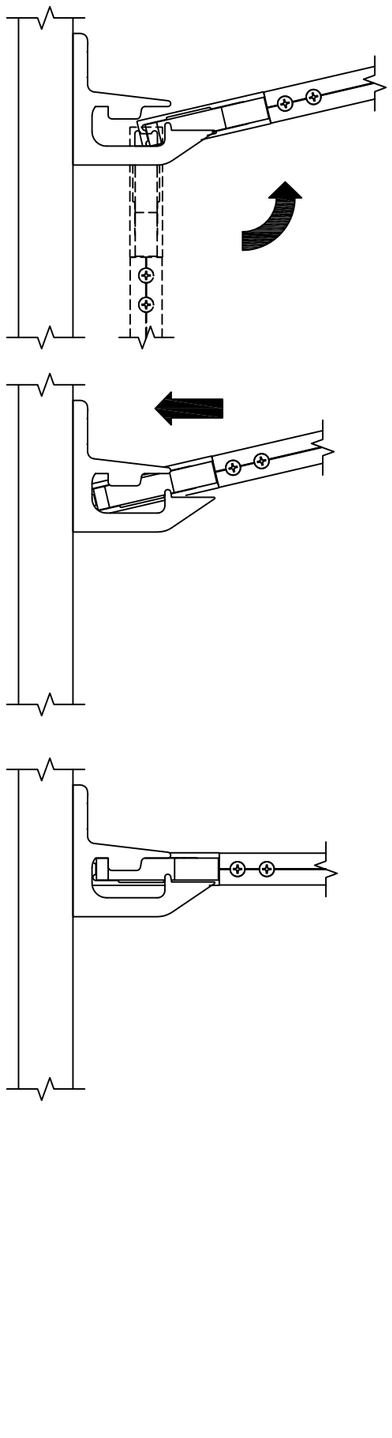

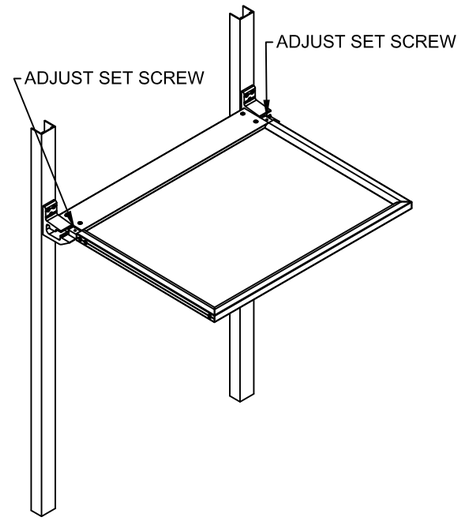

STEP 4

ATTACH LABEL TO BOTTOM OF EVERY FOURTH PANEL. THE LABEL MUST BE CENTERED ON THE BOTTOM SURFACE OF THE HINGE.

CAUTION

This Light Shelf is designed as a Sun Control device and is not intended for storage. Do not place objects on Light Shelf or use as a step.

Keep upper Light Shelf surface clean for optimum performance.

483201,03,03 Kawneer Company, Inc 2003

483201 INLIGHTEN CAUTION STICKER

CONFIDENTIAL AND PROPRIETARY INFORMATION
KAWNEER COMPANY INC.

THESE DRAWINGS ARE THE SOLE AND EXCLUSIVE PROPERTY OF KAWNEER AND CONTAIN SENSITIVE, PRIVILEGED OR CONFIDENTIAL INFORMATION WHICH MAY BE USED ONLY FOR ITS BENEFIT. THE DISCLOSURE OF THESE DRAWINGS TO UNAUTHORIZED PERSONS IS STRICTLY PROHIBITED. THIS DOCUMENT AND ALL COPIES MUST BE RETURNED UPON DEMAND.
© COPYRIGHT KAWNEER COMPANY, INC., 2012

KAWNEER

Product Engineering & Development

InLighten
INTERMEDIATE
INSTALLATION
INSTRUCTIONS

95498-11
02/07/12