USE THESE INSTRUCTIONS IN CONJUNCTION WITH INSTALLATION INSTRUCTIONS 162-971.

PERIMETER ANCHORING

TO CALCULATE END REACTIONS

$$\frac{\text{MODULE(FT) X LENGTH(FT) X WIND LOAD(PSF)}}{2}$$

EQUALS END REACTION IN POUNDS

EXAMPLE $\frac{5' \text{ X } 7' \text{ X } 20 \text{ PSF}}{2} = 350\#$

A

IF THE END REACTION IS 350# OR LESS THE FOLLOWING PERIMETER ANCHORING USING "F" PERIMETERS CAN BE USED.

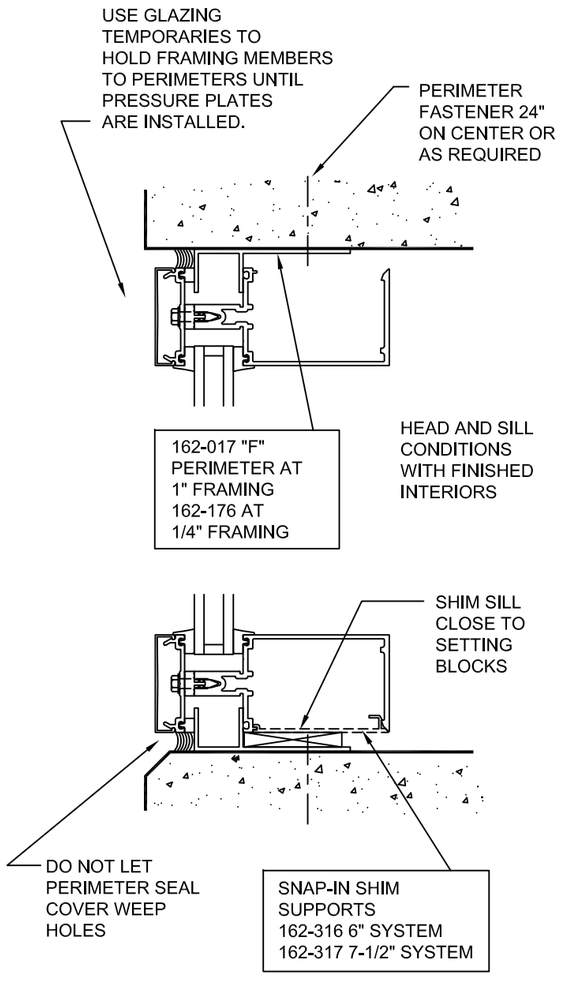

A

IF THE END REACTION IS 350# OR LESS THE FOLLOWING PERIMETER ANCHORING USING "F" PERIMETERS CAN BE USED.

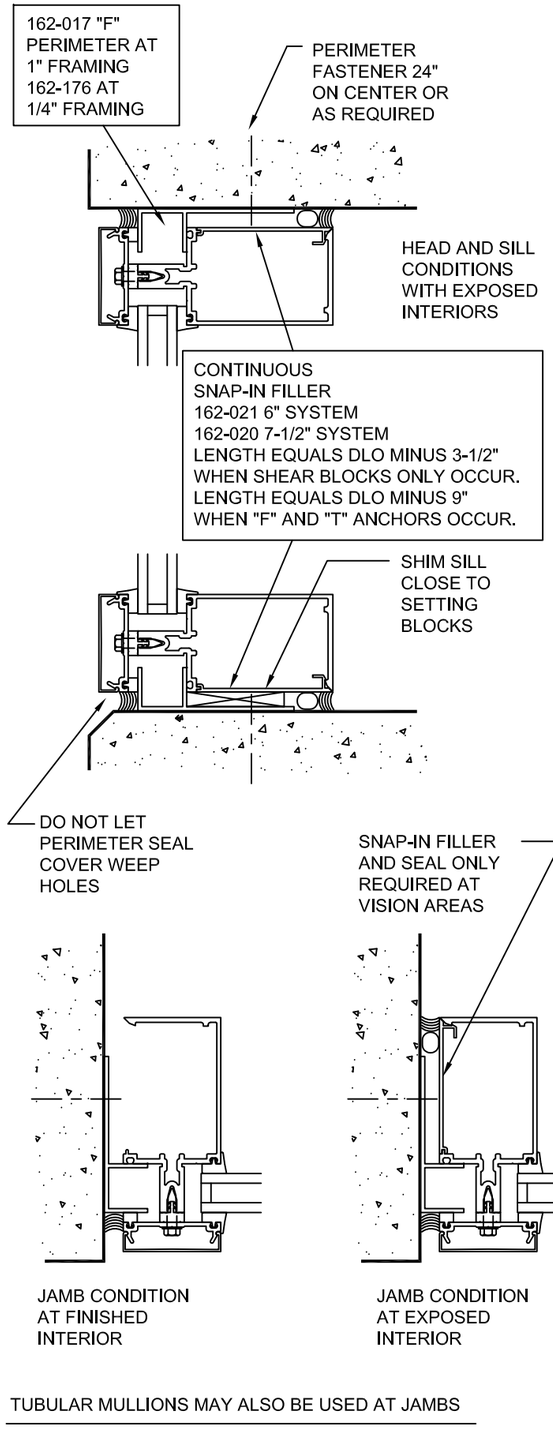

TUBULAR MULLIONS MAY ALSO BE USED AT JAMBS

B

IF THE END REACTION IS 350# TO 750# THE FOLLOWING PERIMETER ANCHORING CAN BE USED.

DRILL 1/2" DIA. HOLE FOR HOLE PLUGS.
DRILL CLEARANCE HOLE FOR 1/4" FASTENER.
MAXIMUM FASTENER SPACING IS 24".
SEE BELOW FOR ADDITIONAL HEAD AND SILL FASTENERS.

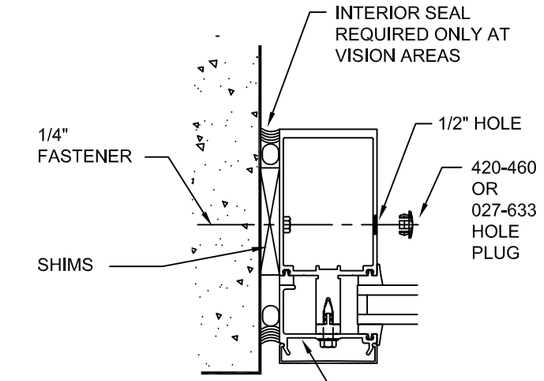

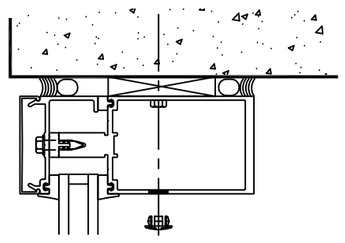

AT PERIMETER PRESSURE PLATES TOP AND BOTTOM END CAPS REQUIRED FOR CAPTURED VERTICALS REFERENCE INSTRUCTIONS 162-971

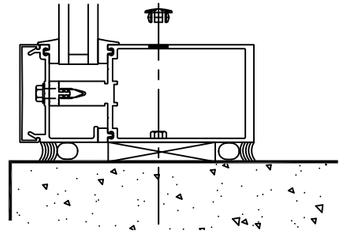

B

IF THE END REACTION IS 350# TO 750# THE FOLLOWING PERIMETER ANCHORING CAN BE USED.

AT THE HEAD AND SILL, INSTALL FASTENERS 6" EACH SIDE OF VERTICALS AND NO MORE THAN 24" ON CENTER. AT LEAST 3 FASTENERS ARE REQUIRED PER LITE OPENING.

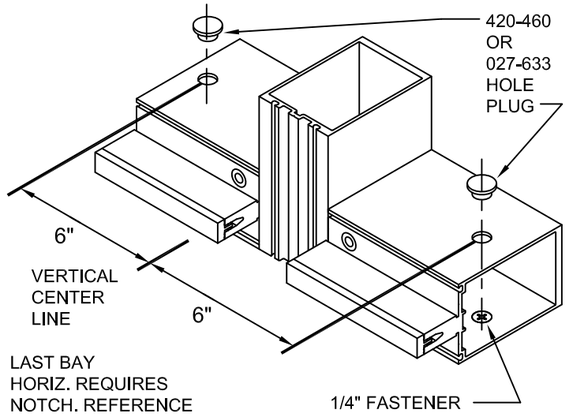

LAST BAY HORIZ. REQUIRES NOTCH. REFERENCE DETAILS SHEET #6.

THIS ANCHORING PROVIDES ADEQUATE SUPPORT FOR THE WALL PROVIDED THE END REACTION AT THE VERTICALS DOES NOT EXCEED 750#. HOWEVER, THE PERIMETER STRUCTURE AND THE PERIMETER FASTENERS ABILITY TO CARRY THE LOAD MUST BE CHECKED PER JOB. CONTACT FACTORY ENGINEERING FOR ASSISTANCE.

PERIMETER PRESSURE PLATES CAN BE USED WITH "F" AND "T" ANCHORS REFERENCE SHEET #3

KAWNEER
AN ALCOA COMPANY

1600 SYSTEM 2
STOCK LENGTH INSTRUCTIONS

PART NUMBER
162-961 1 OF 6

95449-094
04/26/13

DRAWING:

ORDER:

SHT:

USE THESE INSTRUCTIONS IN CONJUNCTION WITH INSTALLATION INSTRUCTIONS 162-971.

PERIMETER ANCHORING

C IF THE END REACTION IS 750# AND GREATER "F" AND "T" ANCHORS ARE REQUIRED AT EACH VERTICAL. PERIMETER MEMBERS MAY BE ANCHORED AS SHOWN IN METHODS "A" OR "B" DEPENDING UPON THE JOB CONDITIONS.

"F" OR "T" ANCHORS SHOULD NOT BE USED IN CONJUNCTION WITH STEEL REINFORCING WITHOUT CHECKING THE STRUCTURAL INTEGRITY OF THE ANCHORS. CONTACT FACTORY ENGINEERING FOR ASSISTANCE.

"F" ANCHORS CAN NOT BE USED WITH OPEN BACK VERTICAL JAMBS.

"F" ANCHOR FOR JAMBS
162-327 AT 6" SYSTEM
162-329 AT 7 1/2" SYSTEM
162-354 AT 10 1/2" SYSTEM

"T" ANCHOR FOR INTERMEDIATE VERTICAL
162-328 AT 6" SYSTEM
162-330 AT 7 1/2" SYSTEM
162-355 AT 10 1/2" SYSTEM

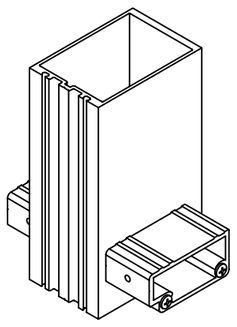

TYPICAL VERTICAL MULLION

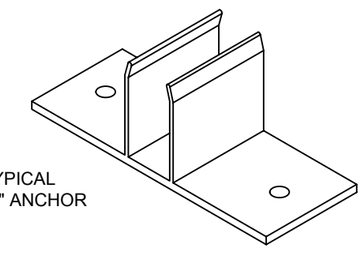

TYPICAL "T" ANCHOR

FASTENER PREPS AS REQUIRED. CONTACT FACTORY ENGINEERING FOR ASSISTANCE.

D HEAD/SILL SHEAR BLOCKS/ANCHORS. REFERENCE STEP #4, SHEET #2, AND STEP #7, SHEET #3 IN THE 162-971 INSTALLATION INSTRUCTIONS.

STRUCTURAL INTEGRITY OF ANCHOR AND FASTENERS MUST BE CHECKED BY FACTORY ENGINEERS.

PERIMETER MEMBERS MAY BE ANCHORED AS SHOWN IN METHODS "A" OR "B" DEPENDING UPON THE JOB CONDITIONS.

USE THIS SHEAR BLOCK WITH OPEN BACK HORIZONTALS WHEN POSSIBLE. IF TUBULAR HORIZONTALS ARE USED A NOTCH IS REQUIRED. REFERENCE FABRICATION DETAILS ON SHEET #5.

VERTICAL HOLE PREPS ARE THE SAME AS TYPICAL SHEAR BLOCKS.

STRUCTURAL SHIMMING IS REQUIRED AT SILL TO ACCOMPLISH DESIGNED PERIMETER SEAL WIDTH.

JAMB SHEAR BLOCK/ANCHOR
162-314 AT 6" SYSTEM
162-315 AT 7 1/2" SYSTEM

MULLION SHEAR BLOCK/ANCHOR
162-342 AT 6" SYSTEM
162-343 AT 7 1/2" SYSTEM

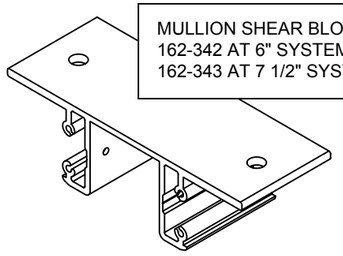

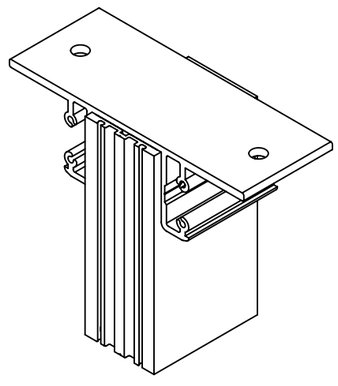

TYPICAL VERTICAL MULLION

REFERENCE INSTALLATION INSTRUCTION 162-983

EXTERIOR FRAME PERIMETERS

WHEN USING "F" AND "T" ANCHORS SHOWN FOR PERIMETER ANCHORING "C", THE FOLLOWING PERIMETER FRAMING CAN BE USED AT THE HEAD AND SILL ONLY. "F" ANCHORS REQUIRE TUBULAR VERTICAL MULLIONS AT JAMBS.

BUT CAN NOT BE USED WITH SHEAR BLOCK/ ANCHOR SHOWN FOR PERIMETER ANCHORING "D".

USE SHEAR BLOCKS
162-384 6" SYSTEM
162-385 7 1/2" SYSTEM

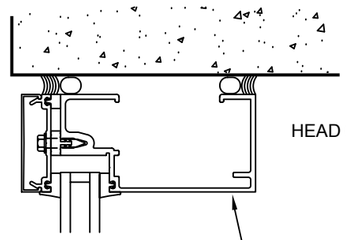

HEAD CONDITION

PERIMETER FRAME
162-203 1" FOR 6" SYSTEM
162-204 1" FOR 7 1/2" SYSTEM
162-205 1/4" FOR 6" SYSTEM
162-206 1/4" FOR 7 1/2" SYSTEM

SHIM SILL CLOSE TO SETTING BLOCKS

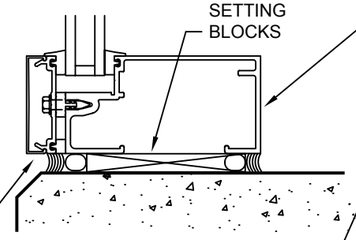

SILL CONDITION

DO NOT LET PERIMETER SEAL COVER WEEP HOLES

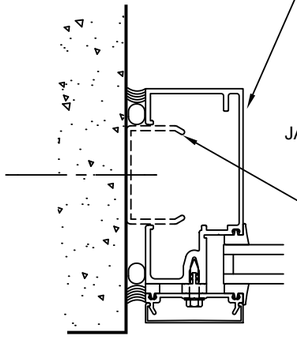

JAMB CONDITION

CLIPS AS REQUIRED FOR WIND LOAD

KAWNEER

1600 SYSTEM 2
STOCK LENGTH INSTRUCTIONS

PART NUMBER
162-961 2 OF 6

95449-87
02/17/12

DRAWING:

ORDER:

SHT:

PRESSURE PLATE FABRICATION

LENGTH OF HORIZONTAL PRESSURE PLATE
NOT TO EXCEED 3 LITES OR APPROX. 15-0".

ATTACHMENT HOLES ARE FACTORY PUNCHED
AT 3" ON CENTER. .266 DIA.(H DRILL).

DETAIL AT JAMB VERTICAL

WEEP HOLES ARE TO BE LOCATED
AS SHOWN. DRILL 5/16" DIA HOLES

162-505	162-506
1" FRAMING	1/4" FRAMING

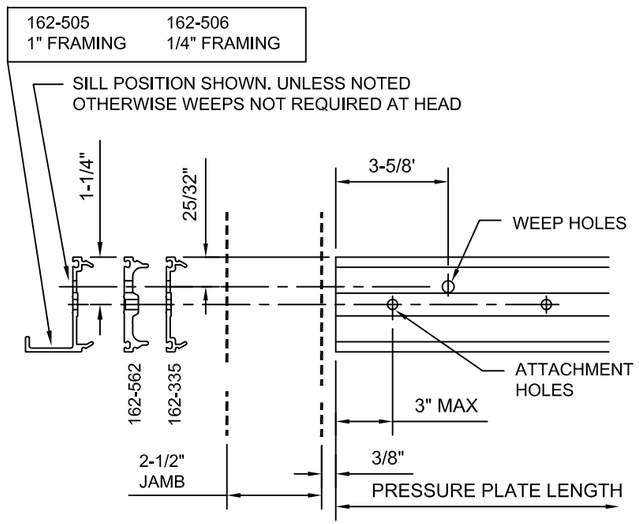

DETAIL AT STRUCTURAL GLAZED VERTICAL

WITH PRESSURE PLATE SPLICE JOINT.

WEEP HOLES ARE TO BE LOCATED
AS SHOWN. DRILL 5/16" DIA HOLES

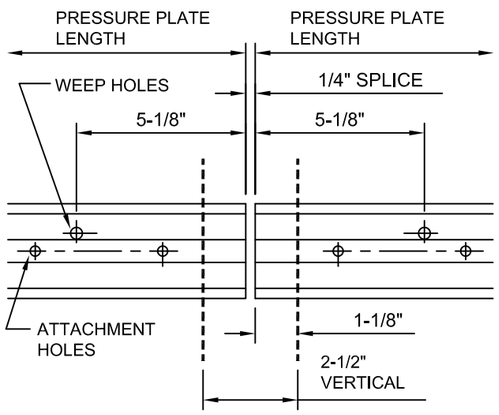

PRESSURE PLATE FABRICATION

FOR FIBERGLASS PRESSURE PLATES

FABRICATION NOTE:

FOR BEST RESULTS OPERATOR MUST USE SHARP 3
FLUTE HIGH STRENGTH STEEL OR COBALT DRILL OR
CARBIDE "PINEAPPLE CUT" TOOL.

DETAIL AT STRUCTURAL GLAZED VERTICAL

WITHOUT PRESSURE PLATE SPLICE JOINT.

WEEP HOLES ARE TO BE LOCATED
AS SHOWN. DRILL 5/16" DIA HOLES

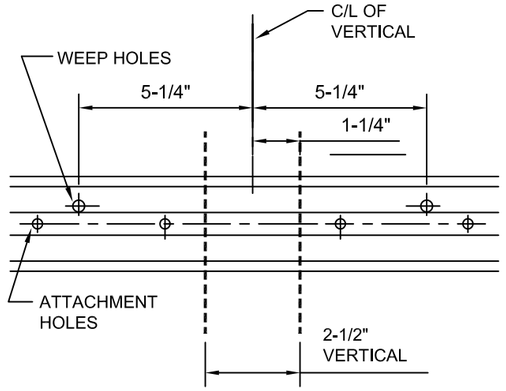

VERTICAL JAMB PRESSURE PLATE

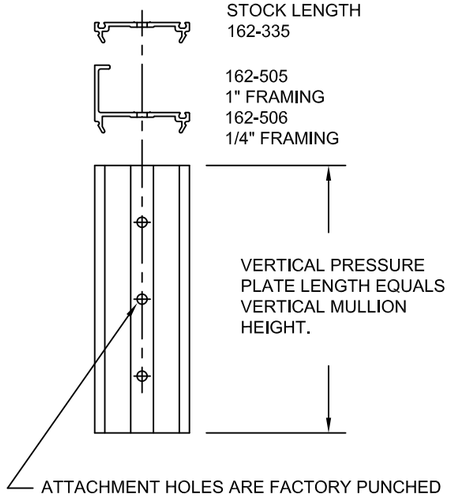

PRESSURE PLATE STOCK LENGTH NUMBER
IS 162-335.

EXTERIOR COVER FABRICATION

VERTICAL JAMB COVER

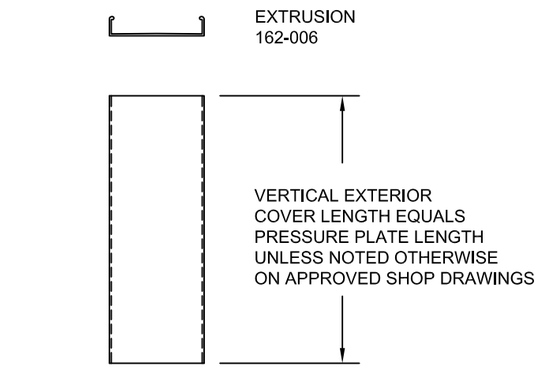

HORIZONTAL COVER PREP FOR WEEPS

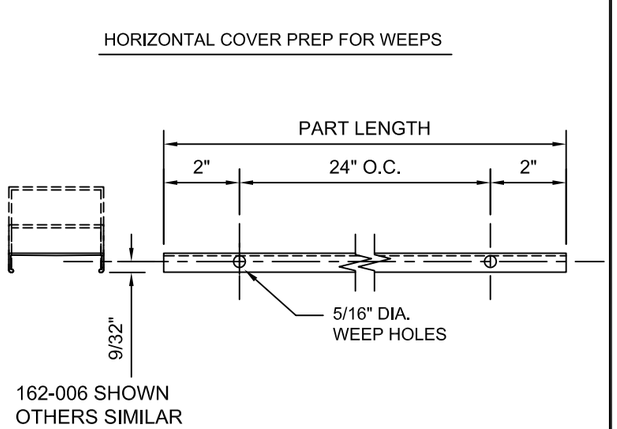

162-006 SHOWN
OTHERS SIMILAR

LENGTH OF HORIZONTAL COVER TO BE
COORDINATED WITH THE PRESSURE PLATE LENGTH.

DETAIL AT JAMB VERTICAL

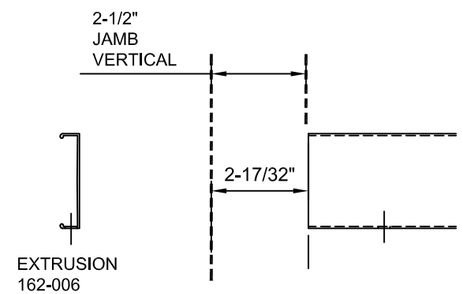

DETAIL AT STRUCTURAL GLAZED VERTICAL

WITH COVER SPLICE JOINT.

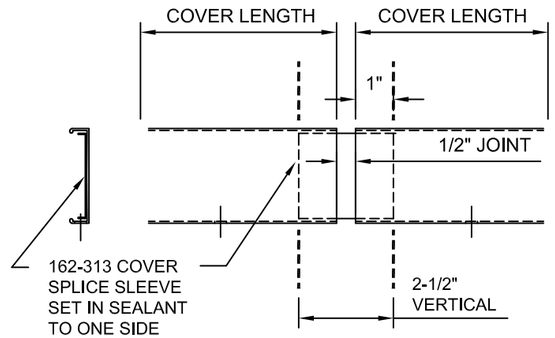

DETAIL AT STRUCTURAL GLAZED VERTICAL

WITHOUT COVER SPLICE JOINT.

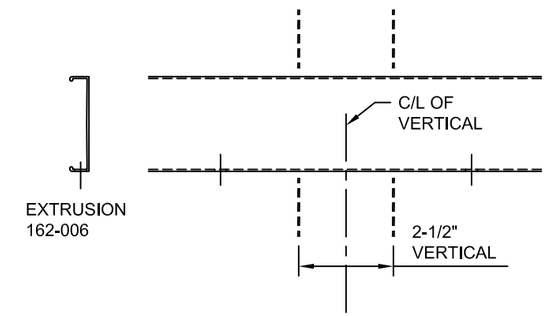

KAWNEER

1600 SYSTEM 2

STOCK LENGTH INSTRUCTIONS

PART NUMBER
162-961 3 OF 6

95449-098
04/04/14

DRAWING:

ORDER:

SHT:

VERTICAL MULLI0N FABRICATION

REFERENCE APPROVED SHOP DRAWINGS FOR VERTICAL LENGTHS AND HORIZONTAL LOCATIONS. SPLICE FIXNG SCREW, STOP SCREW AND JAMB SIDE F-ANCHOR ALIGNMENT PREPS ARE ALL SIMILAR TO PREPS NOTED BELOW. REFERENCE SHOP DRAWINGS AND 162-971 INSTRUCTIONS.

6" SYSTEM

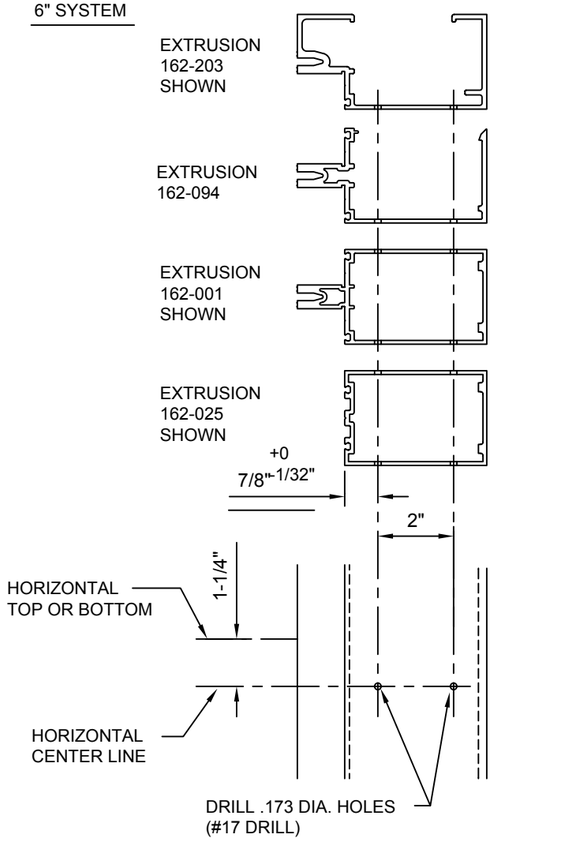

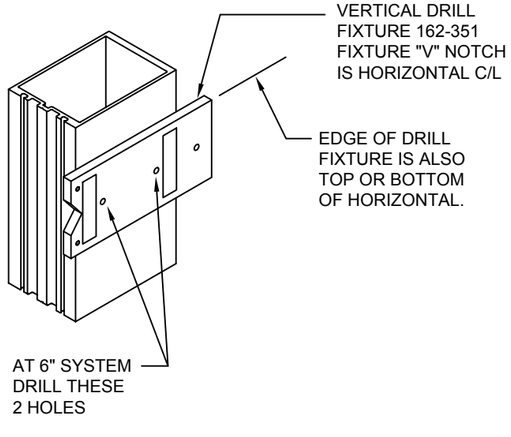

VERTICAL MULLI0N FABRICATION

REFERENCE APPROVED SHOP DRAWINGS FOR VERTICAL LENGTHS AND HORIZONTAL LOCATIONS. SPLICE FIXNG SCREW, STOP SCREW AND JAMB SIDE F-ANCHOR ALIGNMENT PREPS ARE ALL SIMILAR TO PREPS NOTED BELOW. REFERENCE SHOP DRAWINGS AND 162-971 INSTRUCTIONS.

7-1/2" SYSTEM

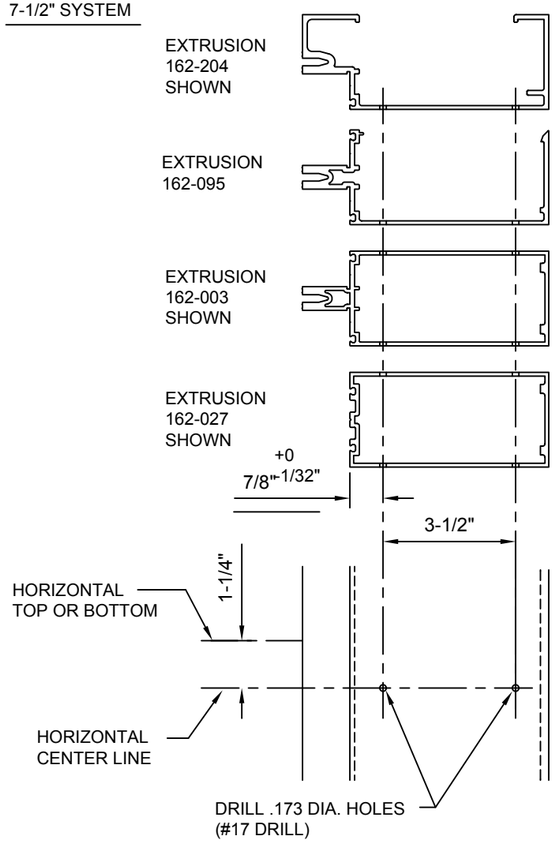

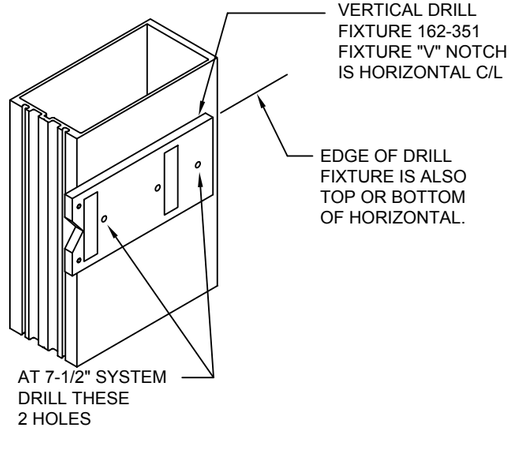

VERTICAL MULLI0N FABRICATION

REFERENCE APPROVED SHOP DRAWINGS FOR VERTICAL LENGTHS AND HORIZONTAL LOCATIONS. SPLICE FIXNG SCREW, STOP SCREW AND JAMB SIDE F-ANCHOR ALIGNMENT PREPS ARE ALL SIMILAR TO PREPS NOTED BELOW. REFERENCE SHOP DRAWINGS AND 162-971 INSTRUCTIONS.

10-1/2" SYSTEM

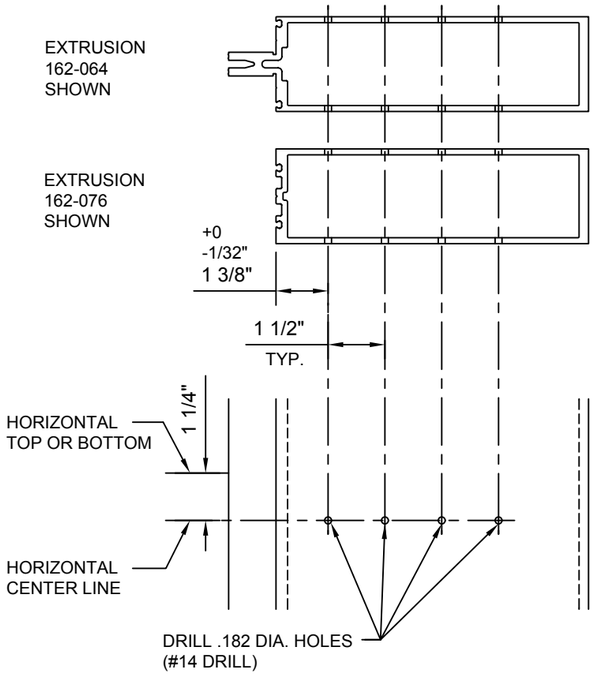

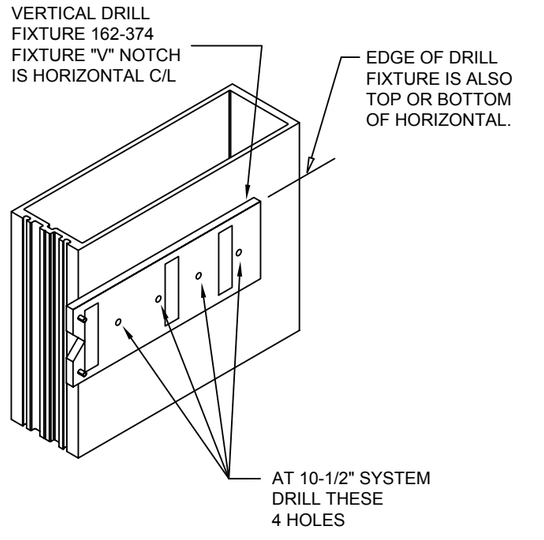

VERTICAL ADAPTER FABRICATION

VERTICAL SPANDREL ADAPTER

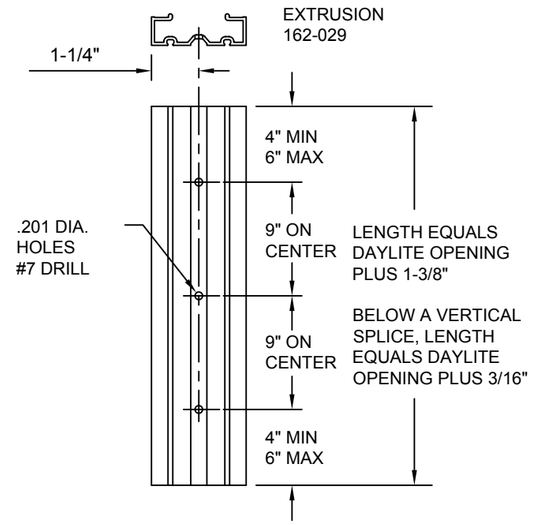

VERTICAL TONGUE ADAPTER

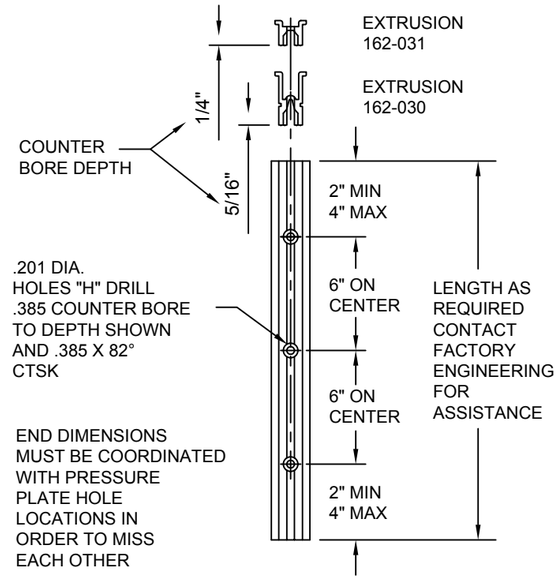

KAWNEER

1600 SYSTEM 2

STOCK LENGTH INSTRUCTIONS

PART NUMBER
162-961 4 OF 6

95449-87
02/17/12

DRAWING:

ORDER:

SHT:

ADAPTER FABRICATION

SPANDREL ADAPTERS

ADAPTERS ARE SQUARE CUT

HORIZONTAL ADAPTER LENGTH EQUALS DAYLITE OPENING MINUS 1/16"

EXTRUSION 162-019

VERTICAL ADAPTER LENGTH EQUALS DAYLITE OPENING PLUS 1-3/8"

EXTRUSION 162-019

TONGUE ADAPTER APPLICATION

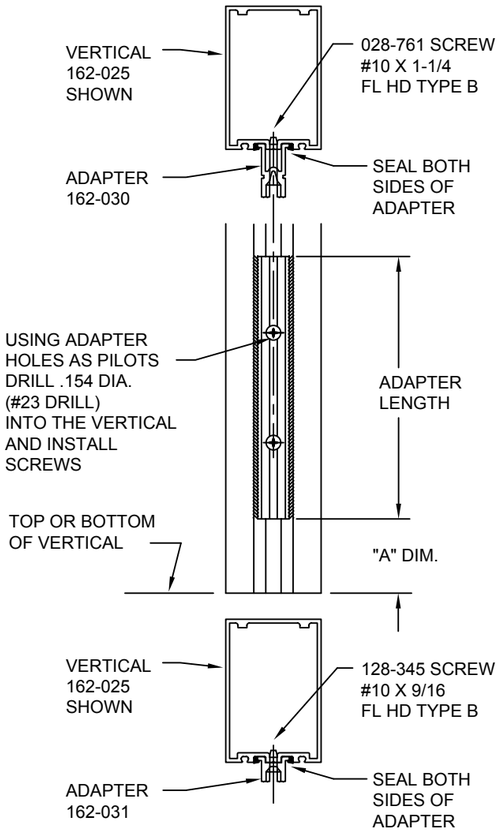

HORIZONTAL FABRICATION

HORIZONTAL AND OPEN BACK FILLER LENGTH EQUALS DAYLITE OPENING MINUS 1/32".

6", 7-1/2" AND 10-1/2" SYSTEMS

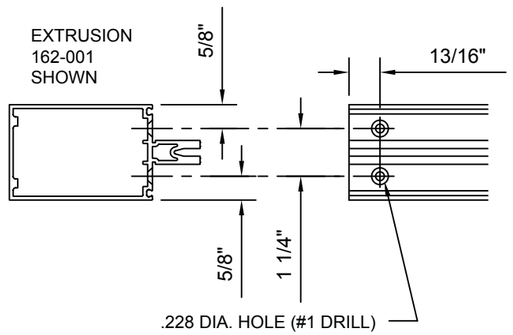

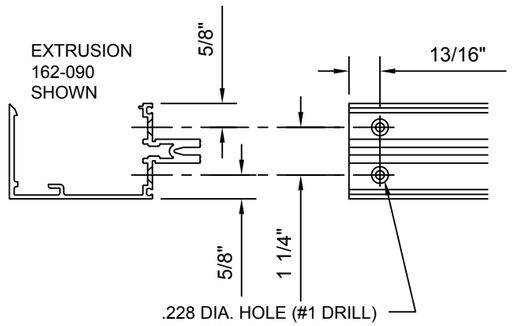

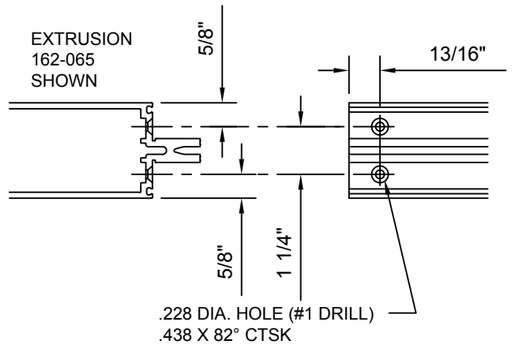

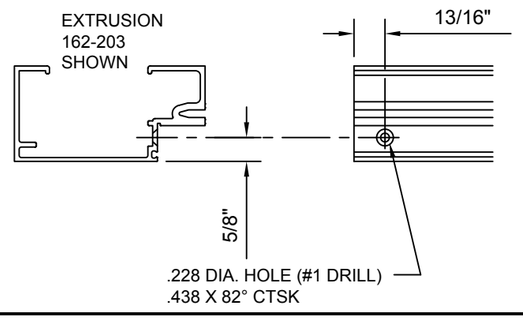

HORIZONTAL FABRICATION

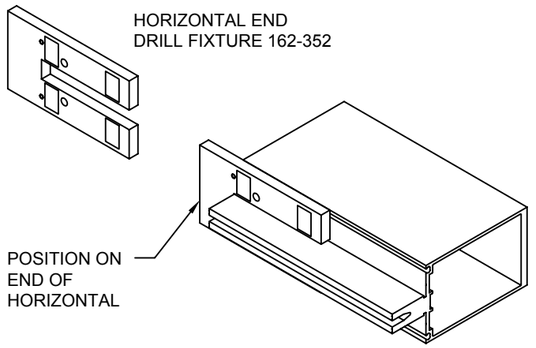

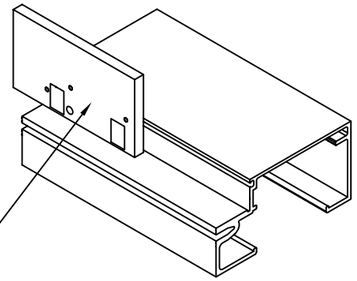

ADDITIONAL SHEAR BLOCK PREP FOR 10-1/2" SYSTEM

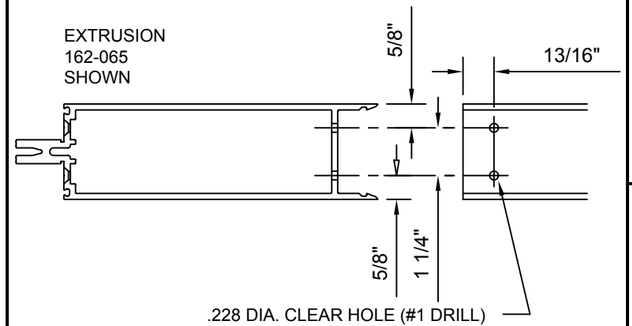

HORIZONTAL FABRICATION

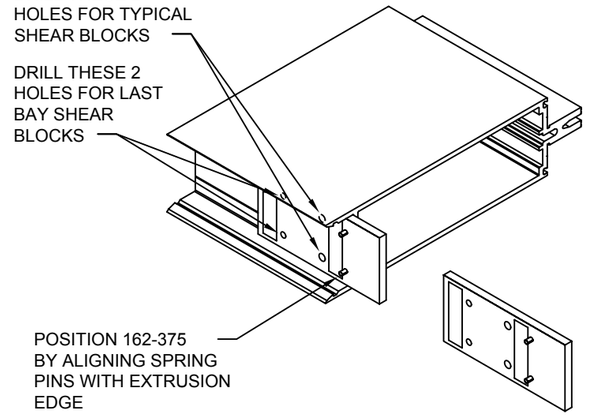

ADDITIONAL LAST BAY SHEAR BLOCK PREP AND NOTCH FOR 10-1/2" SYSTEM

NOTCH MUST BE MADE AFTER LAST BAY SHEAR BLOCK HOLE PREPS.

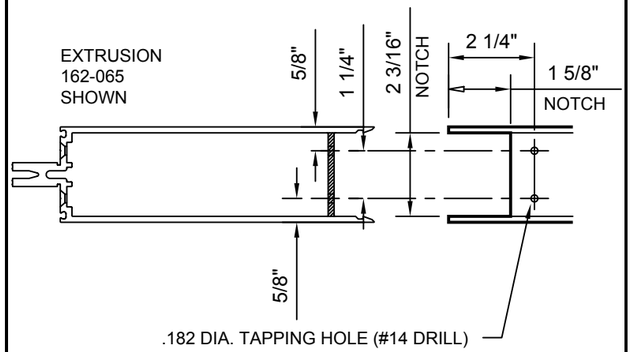

KAWNEER

1600 SYSTEM 2

STOCK LENGTH INSTRUCTIONS

PART NUMBER 162-961 5 OF 6

95449-87
02/17/12

DRAWING:

ORDER:

SHT:

HORIZONTAL FABRICATION

OPEN BACK HORIZONTAL NOTCH FOR "F" SHEAR BLOCK AT TYPE "D" ANCHORING.

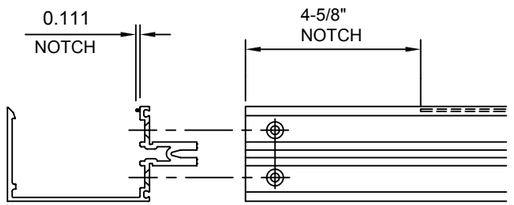

TUBULAR HORIZONTAL NOTCH FOR "F" SHEAR BLOCK AT TYPE "D" ANCHORING.

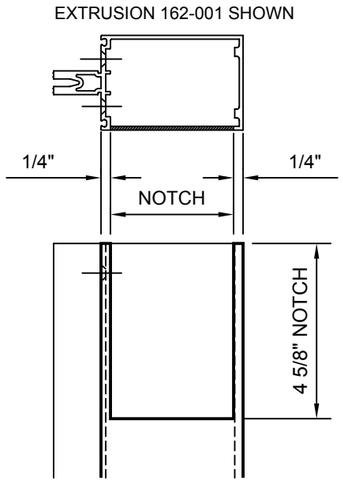

HORIZONTAL FABRICATION

LAST BAY HORIZONTAL NOTCH FOR SHEAR BLOCK AT TYPE "B" ANCHORING.

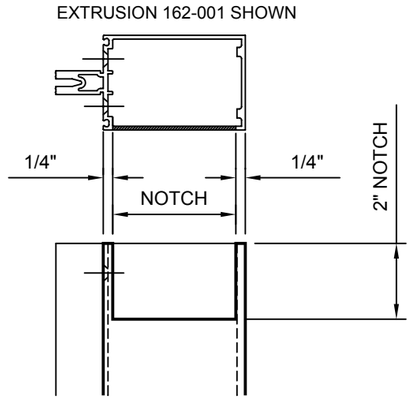

10-1/2" SYSTEM TUBULAR HORIZONTAL NOTCH AT TYPE "C" ANCHORING.

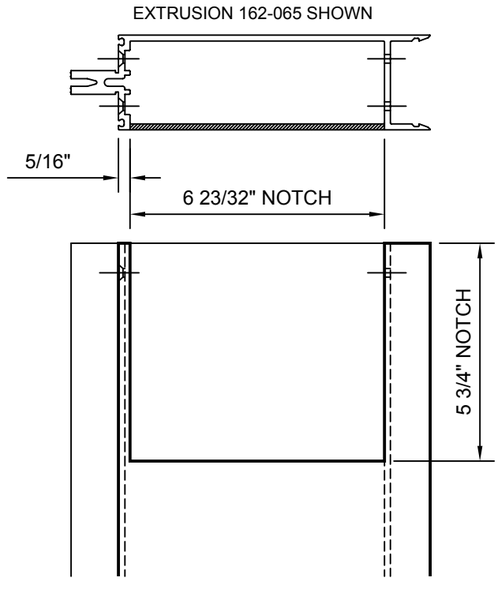

PERIMETER FABRICATION

PERIMETER FILLER NOTCH BOTH ENDS
ALL HEAD AND SILL FILLERS.

HORIZONTAL LENGTH EQUALS
DAYLITE OPENING PLUS
1-3/16" EACH END AT
STRUCTURAL GLAZED VERTICALS.
DAYLITE OPENING PLUS
3/4" EACH END AT
PRESSURE PLATE VERTICALS.

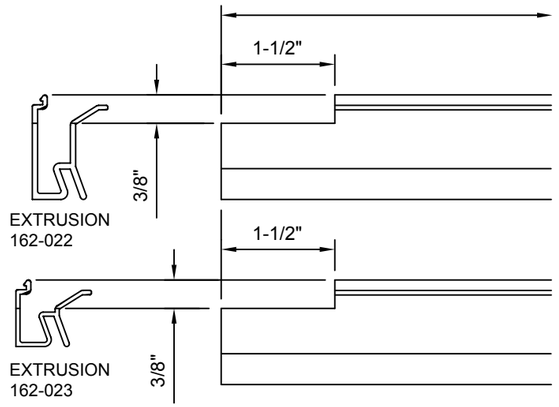

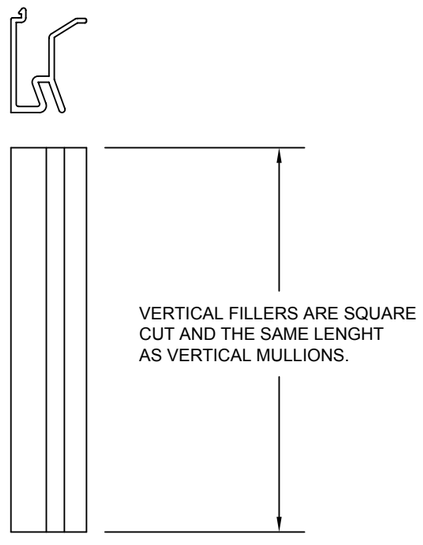

KAWNEER

1600 SYSTEM 2

STOCK LENGTH INSTRUCTIONS

PART NUMBER
162-961 6 OF 6

95449-70
07/11/08

DRAWING:

ORDER:

SHT: